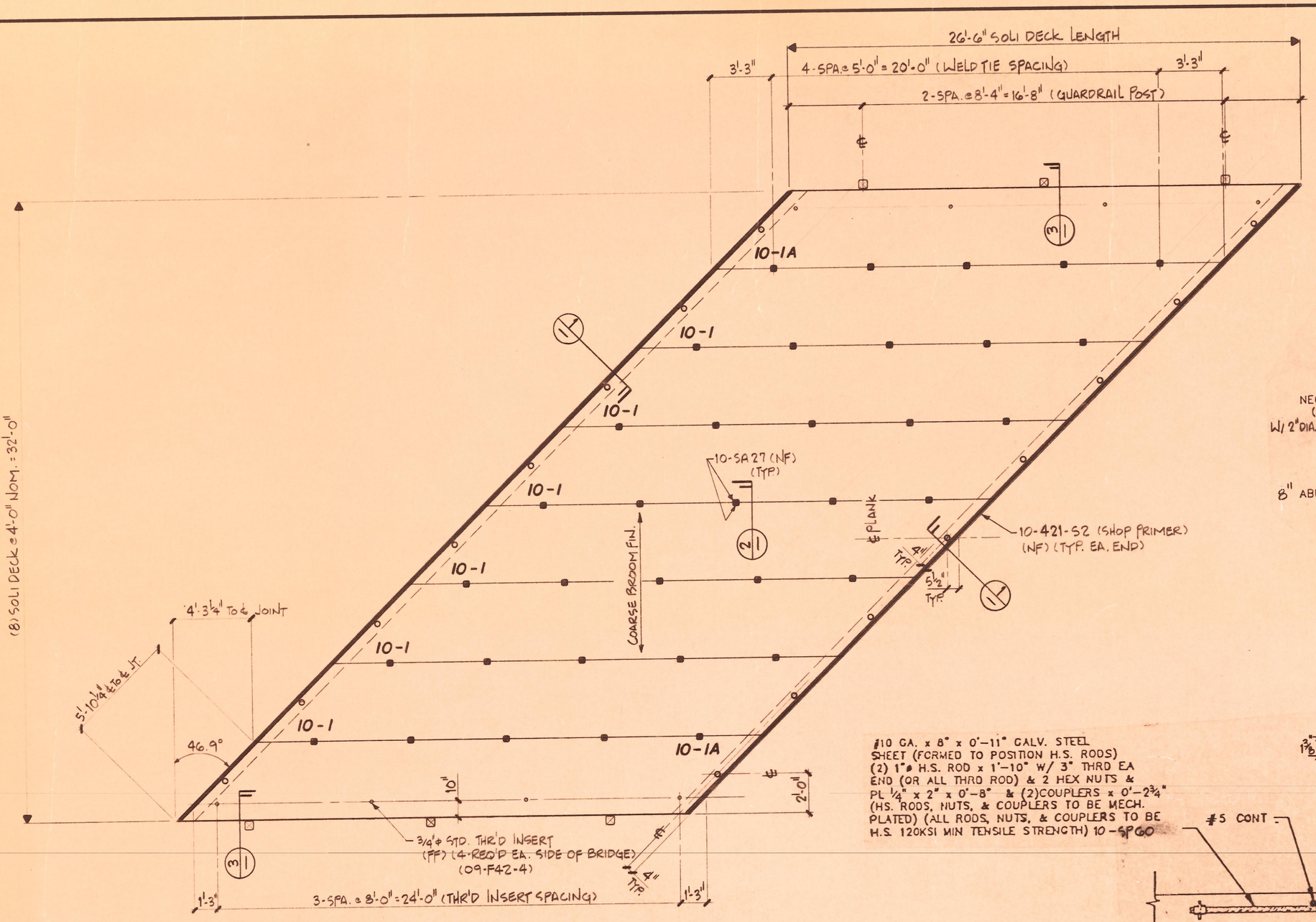

BRIDGE PLAN

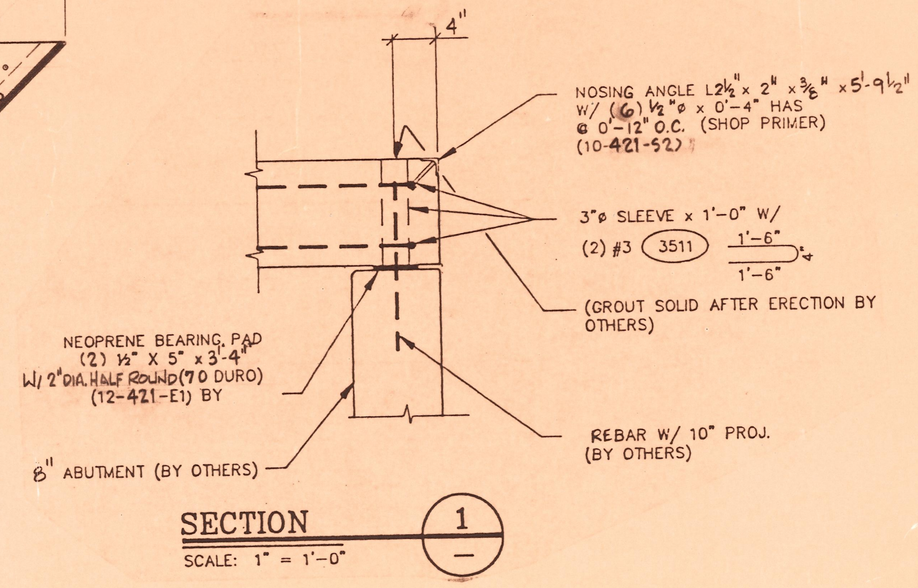

SECTION 1
SCALE: 1" = 1'-0"

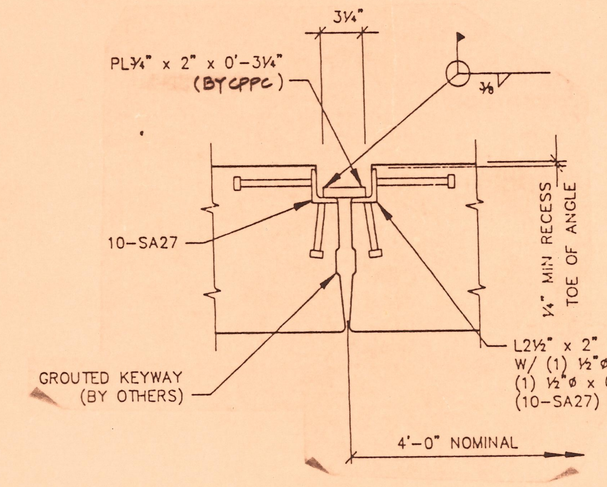

TYPICAL WELD TIE

SECTION 2
SCALE: 1½" = 1'-0"

#10 GA. x 8" x 0'-11" GALV. STEEL SHEET (FORMED TO POSITION H.S. RODS) (2) 1"ø H.S. ROD x 1'-10" W/ 3" THRD EA END (OR ALL THRD ROD) & 2 HEX NUTS & PL ¼" x 2" x 0'-8" & (2) COUPLERS x 0'-2¾" (HS. RODS, NUTS, & COUPLERS TO BE MECH. PLATED) (ALL RODS, NUTS, & COUPLERS TO BE H.S. 120KSI MIN TENSILE STRENGTH) 10-SP60

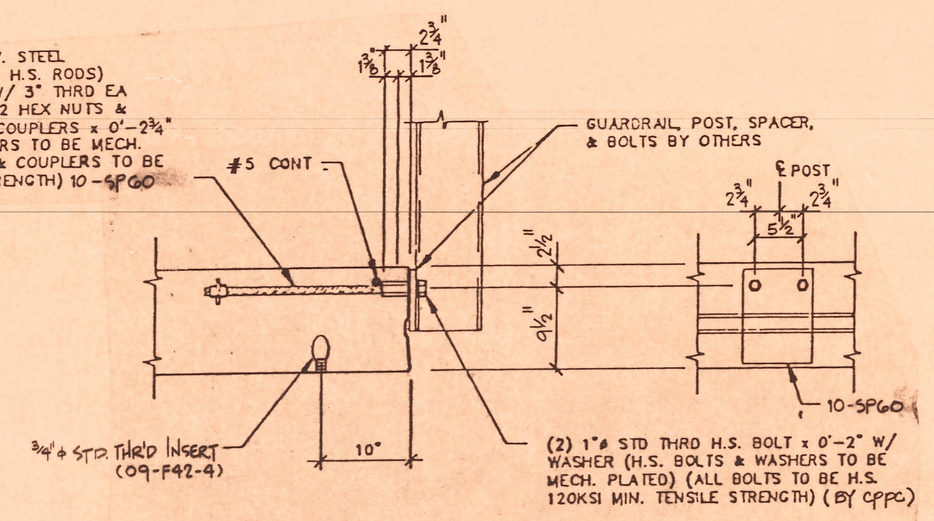

GUARDRAIL POST CONNECTION

SECTION 3

GENERAL NOTES

CONCRETE: HARDROCK @ 155 PCF W/ 5% AIR ± 1½%
F'c = 5500 PSI @ 28 DAYS
F'ci = 3500 PSI @ TRANSFER

REINFORCING: ALL BARS TO BE ASTM A615 GRADE 60, EXCEPT #3 BARS MAY BE ASTM A615 GRADE 40. (AASHTO M-31)
STRAND: ½"ø 270KSI 7 WIRE ASTM A416 (AASHTO M-203)
Fult = 41.3k Ft = 27.9k Fe = 22.0k LOW LAX
INITIAL PRESTRESS FORCE = 28.9K PER STRAND
STRESS STRANDS TO 0.70 Fy (28.9k)

CAMBER: △ 1 = +½" △ 30 = +4⅝"

LOADING: HS20-44 + 25 PSF ASPHALT OVERLAY

STRUCTURAL SHAPES AND PLATES: ASTM A36 (AASHTO M-183)

WGHT. = 16,430# C.Y. 3.93

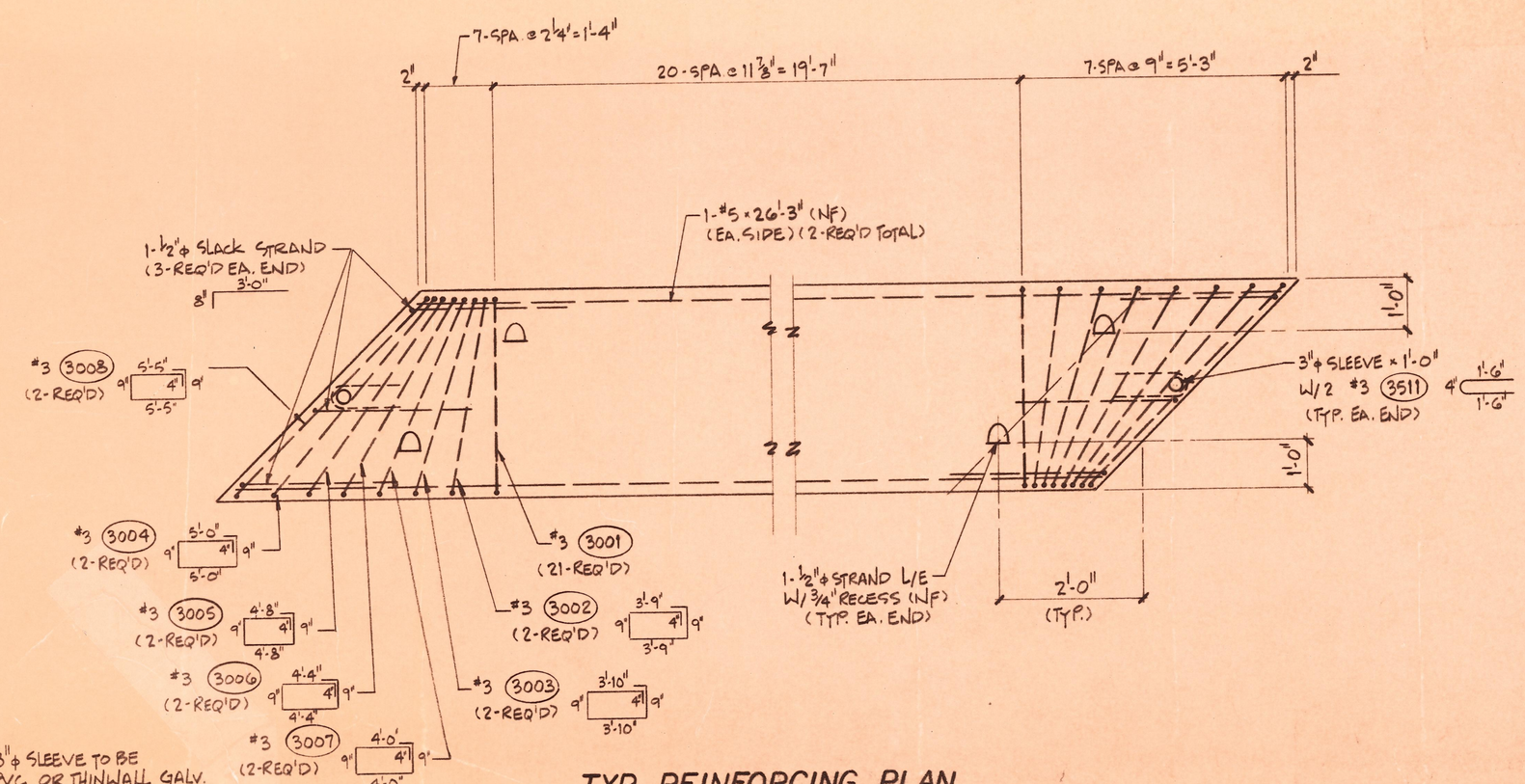

NOTE: 3"ø SLEEVE TO BE PVC OR THINWALL GALV. PIPE

TYP. REINFORCING PLAN

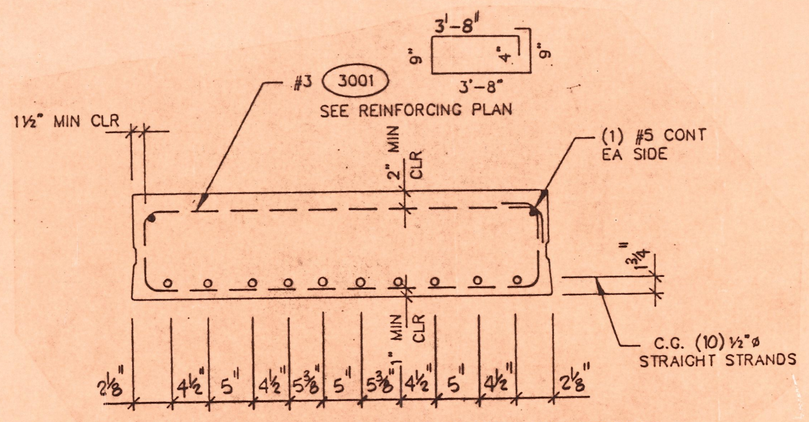

TYPICAL REINFORCING SECTION
STRESS STRANDS TO 0.70 Fy (28.9K)

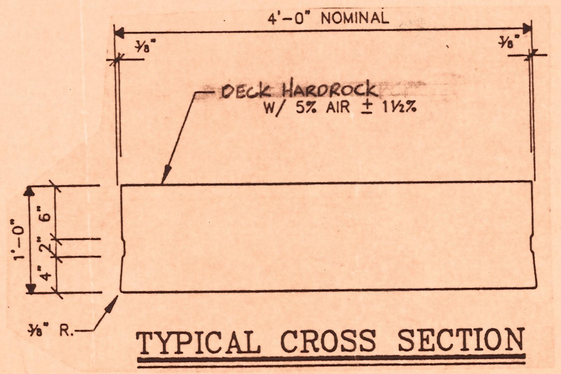

TYPICAL CROSS SECTION

FLOYD B. JONES, STATE OF WASHINGTON, REGISTERED Professional Engineer
1/10/92

NO.	REVISIONS	DATE	CHK'D
2	CHANGE IN NAME & OWNER	3-13-92	CP
1	REVISED PER CPPC CHECK	1-15-92	CP

DRAWN T. GEE
CHK'D CP
SUBMITTED
ISSUED

GEN. CONTR. KITTITAS CNTY. PUBLIC WORKS
ARCHITECT
ENGINEER

TITLE DECK PLAN & SECTIONS
JOB & LOCATION WEAVER ROAD BR. #88322 KITTITAS CNTY., WA.

CENTRAL PRE-MIX PRESTRESS CO.
(509) 534-6221
E. 5111 BROADWAY SPOKANE, WASHINGTON 99206
BOX 3386 SPOKANE, WASHINGTON 99220

PCI CERTIFIED PLANT

JOB NO. 92-421
SHEET NO. 1
LATEST REV. 2