CURVE	RADIUS	LENGTH	DELTA
C1	25.00'	27.13'	62°10'54"
C2	50.00'	85.99'	98°32'07"
C3	50.00'	37.11'	42°31'13"
C4	50.00'	9.71'	11°07'33"

LINE	DIRECTION	DISTANCE
L1	S 51°00'00" E	322.77'
L2	S 51°00'00" E	8.66'
L3	N 38°59'59" E	50.00'

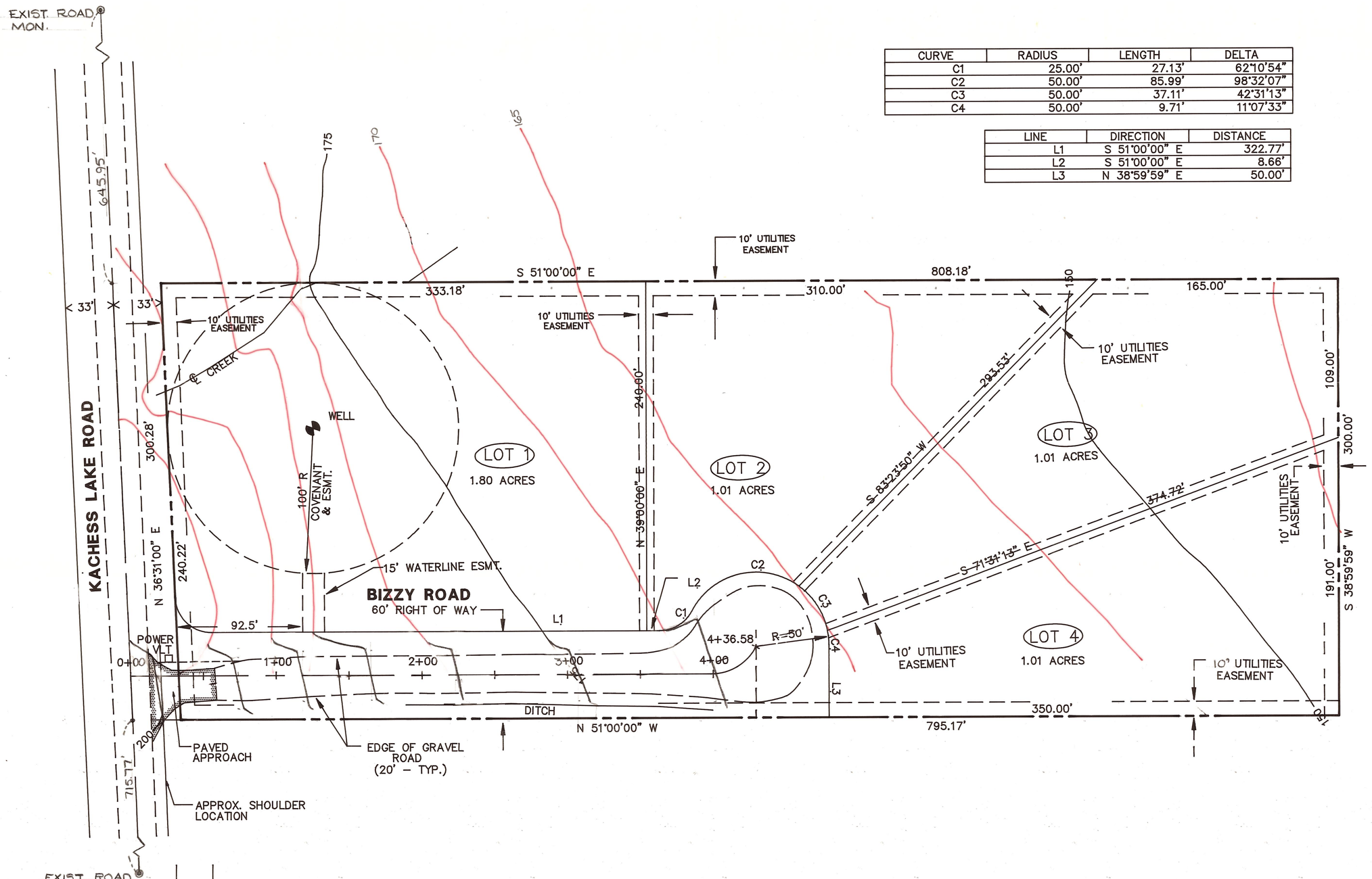

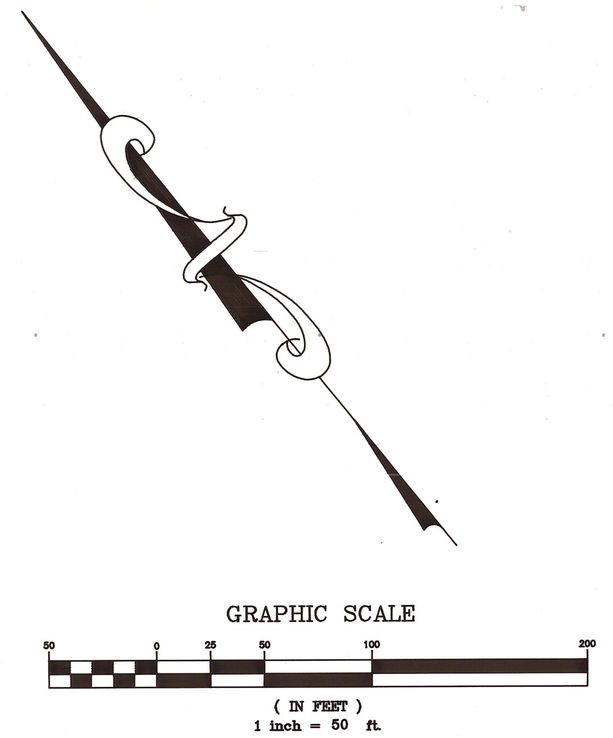

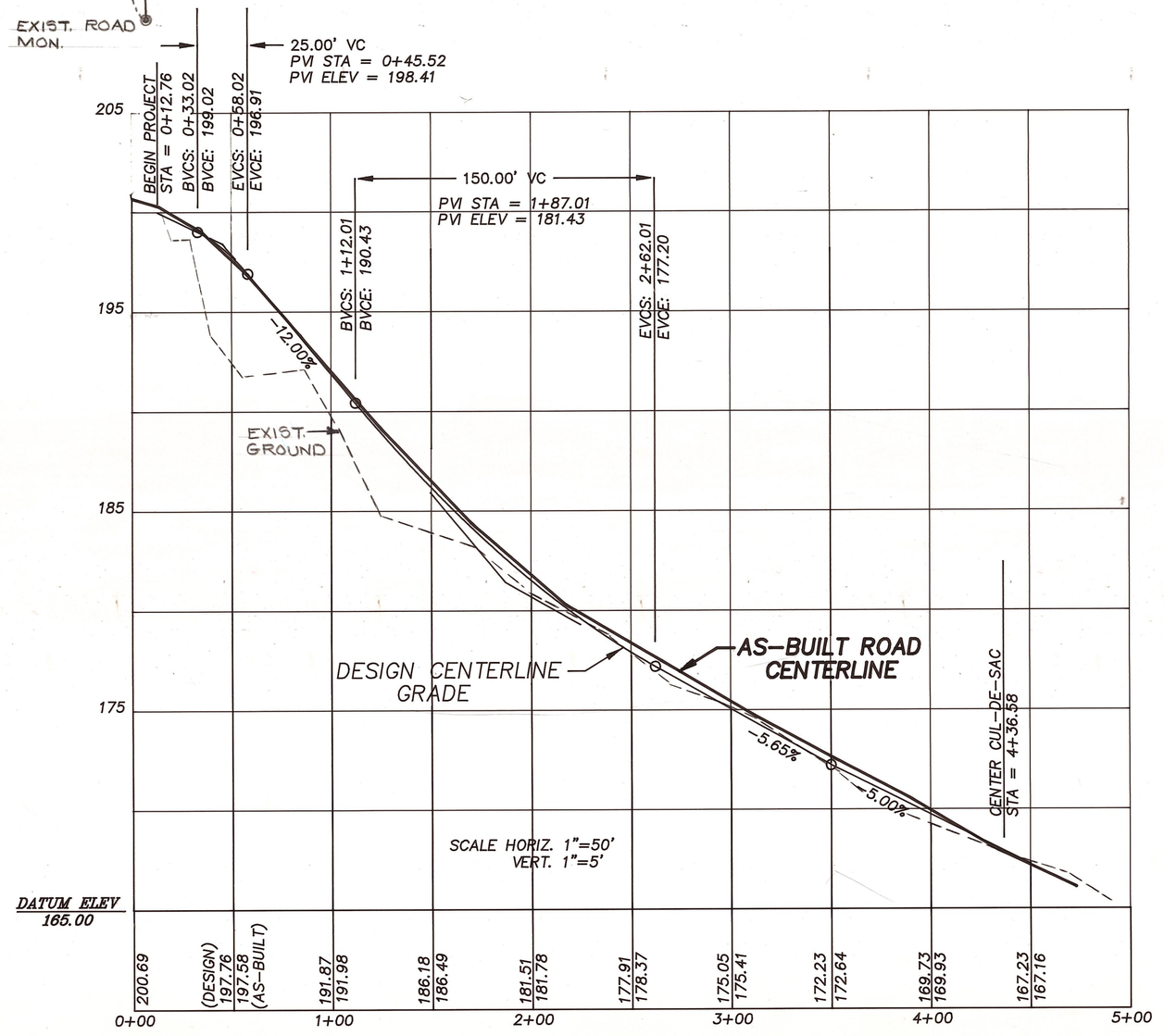

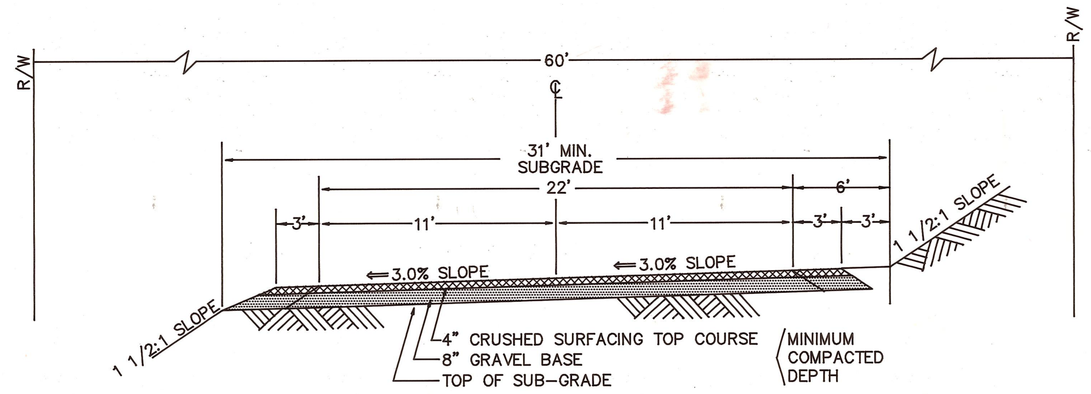

ROADWAY SECTION
(NTS)

This road will not be maintained by Kittitas County

All materials used must first be approved by the Director of Public Works.

GRAVEL BASE—maximum particle size shall not exceed 2/3 of the layer being placed.

ALLEN L. LONG
STATE OF WASHINGTON
9375
REGISTERED PROFESSIONAL ENGINEER
8/17/93
EXPIRES 11/10/94

APPROVED FOR CONSTRUCTION This 10th day of November A.D., 1993.
REVIEW IS FOR GENERAL COMPLIANCE WITH COUNTY REQUIREMENTS, AND NO RESPONSIBILITY IS ASSUMED FOR ACCURACY OF DIMENSIONS OR DETAILS.

(seal)
Kittitas County Engineer

REVISIONS	BY	DATE
ADDED DESIGN GRADES	T.L.	8/17/93
PER KITTITAS COUNTY	L.R.	8/27/93
REVISED ROAD DETAIL	L.P.	9/93

AS-BUILT ROAD PLAN & PROFILE

BIZZY ROAD K.C.S.P. 91-13

EASTSIDE CONSULTANTS, INC.
ENGINEERS-SURVEYORS
415 RAINIER BLVD. N.
ISSAQUAH, WASHINGTON 98027
PHONE: (206)392-5351

JOB NO.	91085AB1
DATE	8/18/93
SCALE	1"=50'
DESIGNED	A.L./L.W.
DRAWN	L.W./T.G.L.
CHECKED	A.L.
APPROVED	.

SHEET 1 OF 1

30-06 BIZZY ROAD (Short Plat 91-13 Public Road — off system)