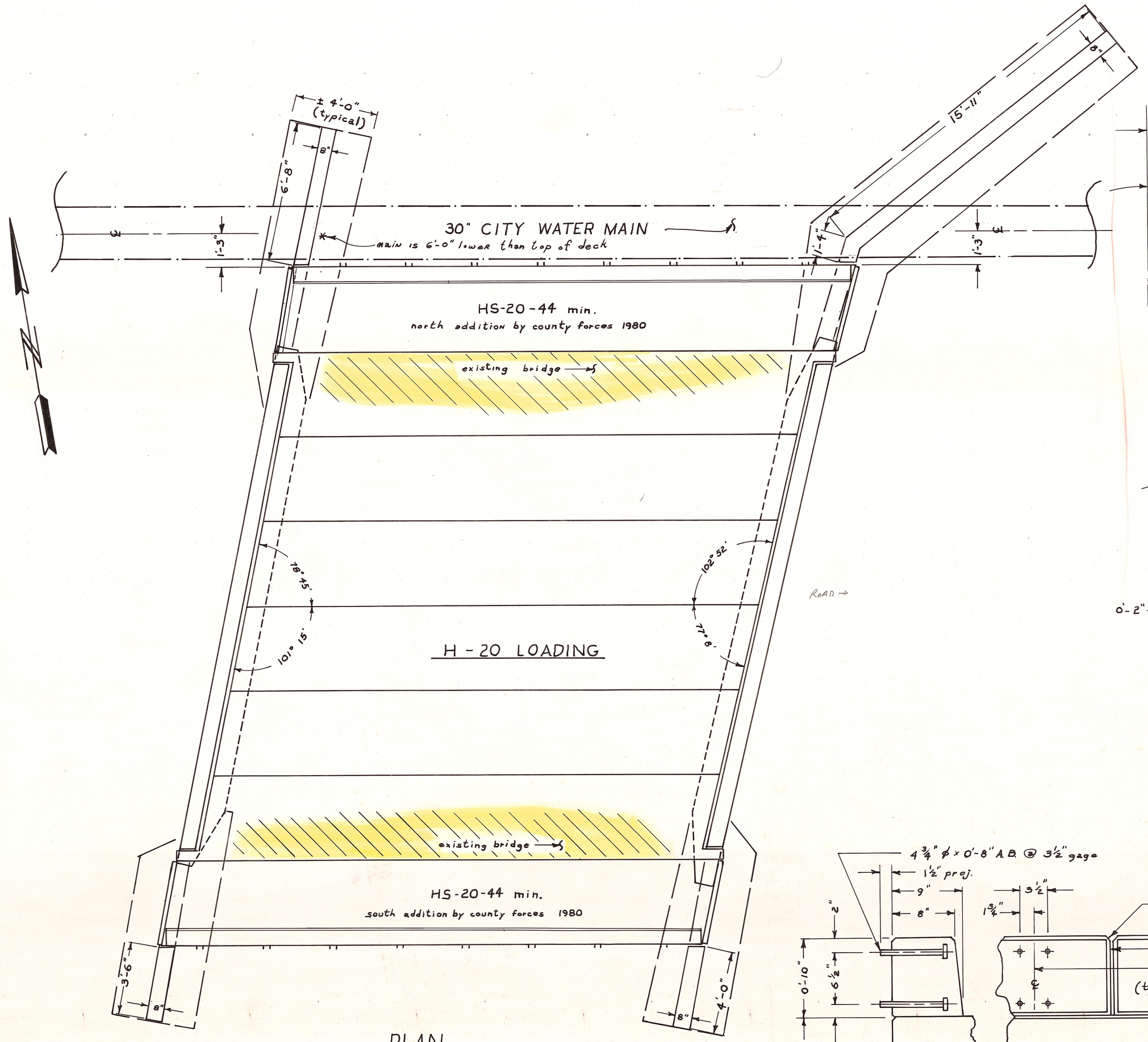

PLAN
scale 1" = 3'

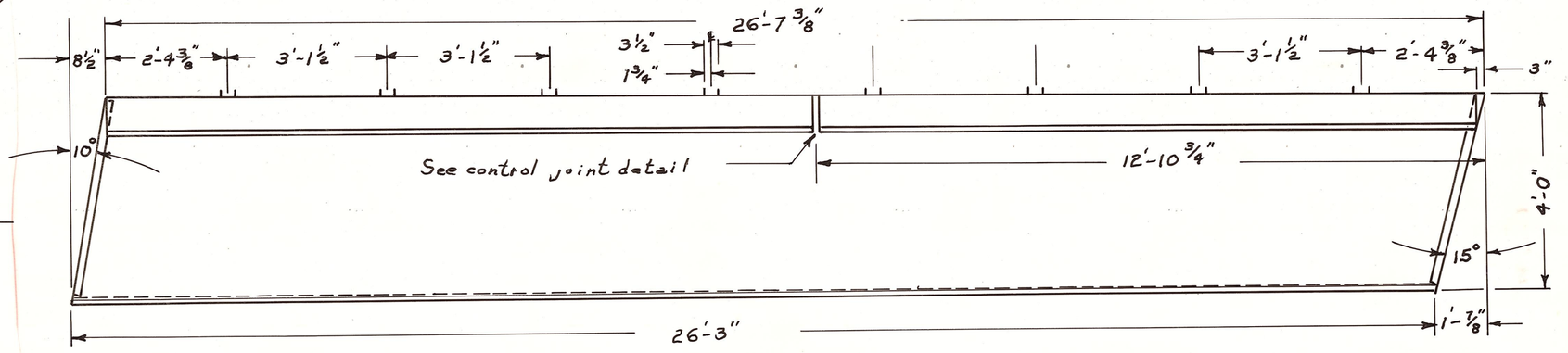

PLAN - NORTH ADD.
scale 1/2" = 1'

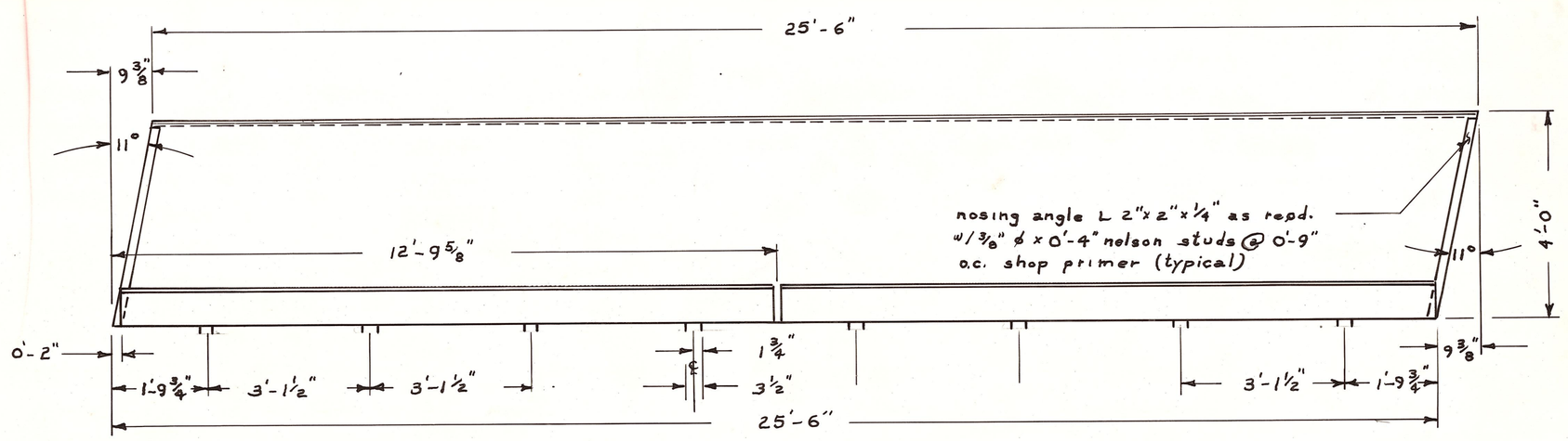

PLAN - SOUTH ADD.
scale 1/2" = 1'

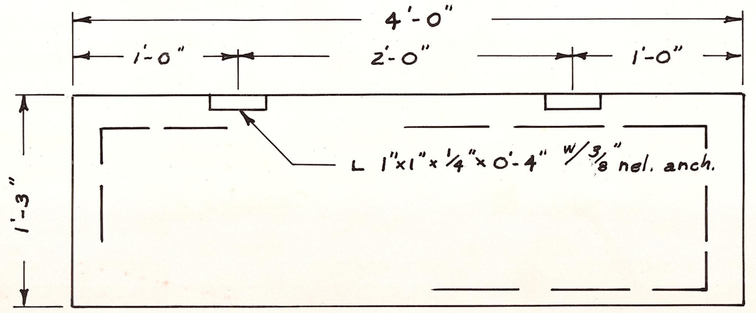

END CLOSURE DETAIL
scale 1 1/2" = 1'

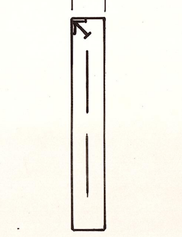

END VIEW

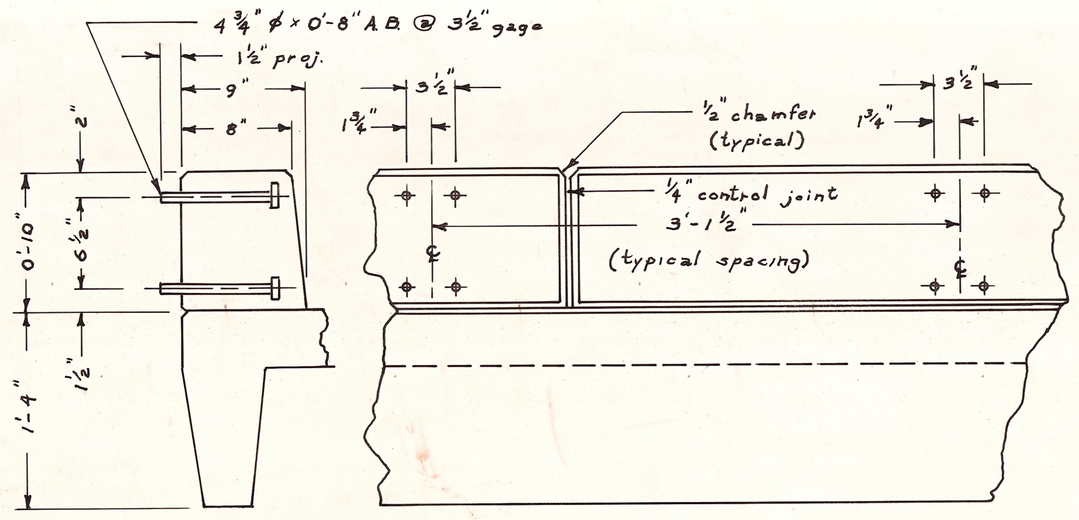

CURB, CONTROL JOINT & GUARD RAIL POST CON. DETAIL
scale 1 1/2" = 1'

OFFICE OF COUNTY ROAD ENGINEER

KITTITAS COUNTY

ELLENSBURG, WASHINGTON

DRY CREEK ROAD

CURRIER CREEK BR. 88272

SCALE: H V **CRP**

DRAWN BY **DATE** 1-80 **SHEET** 1 **OF** 1

APPROVED: DATE COUNTY ROAD ENGINEER